EAGLE 4.0 - LIBRARY | NAME: L298card2003SansRal | DATE: 02/11/2003 20:18:11 | SHEET: 1/1
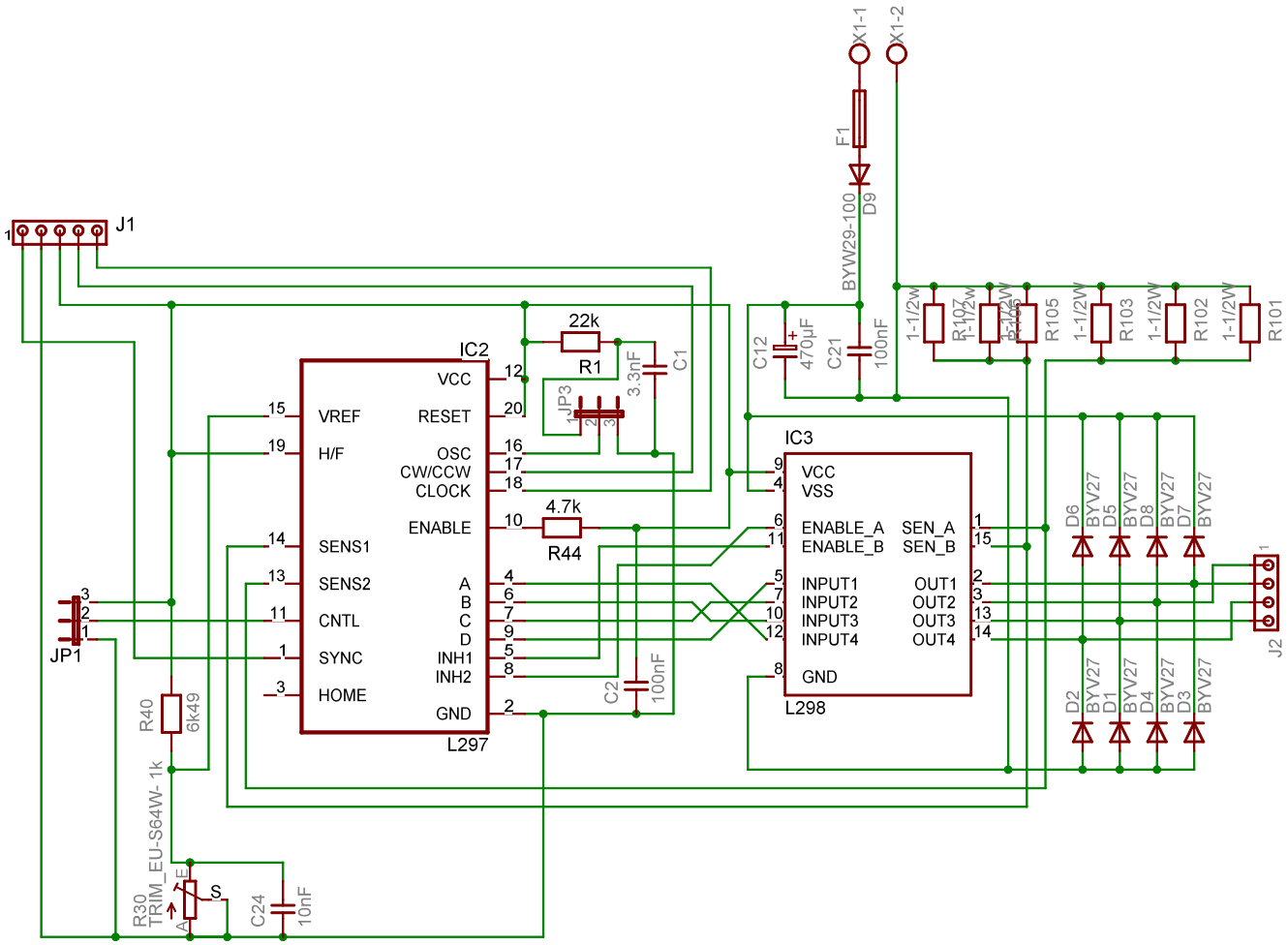
Devices